August 2012

Issue: 3

THE FLEX INSIDER

A Word from our CEO

Dear Customer,

Greg and Lori asked me for a few words for this month's FlexInsider. Here they are:

WE'RE BUSY!

The hardware "build package" has been released to our manufacturing partner AMS so production FLEX-6000s are in the works.... Our software teams are working on both the operating system and the Graphical User Interface (GUI) of SmartSDR.... Systems are being shaken, rattled, and rolled... You get the picture: WE'RE BUSY doing all the things required to move a project from an idea to reality.

I'd better get back to the lab.... Talk to you soon.

73,

Gerald Youngblood, K5SDR
President & CEO

FLEX-6000 Signature Series - Functions of the Rear Panel

- by Greg Jurrens - K5GJ, VP Sales & Marketing

What's the SECOND thing most hams look at when they pick up their new radio? The BACK PANEL of course! We've heard more than once that our radios should really be mounted with the connectors in the front since that's where most of the action occurs.

Let's review the connections on the new FLEX-6500, FLEX-6700, and FLEX-6700R. Below are rear panel diagrams for each of the new radios in the FLEX-6000 Signature Series with numbers referring to each
connection. Follow along for the radio you have on order.

In This Issue

FLEX-6000 Rear Panel Connections

FLEX-6000 Signal Chain Basics

FLEX-6700 Signature Series Jacket Survey

Upcoming Events

September 1-2, 2012
Shelby Hamfest
Dallas, N.C.

September 14-16, 2012
W9DXCC Convention
Chicago, IL

September 21-23, 2012
ARRL & TAPR Digital Communications Conf.
Atlanta, GA

October 6, 2012
Belton Hamfest
Belton, TX

October 12-14, 2012
Pacificon
San Jose, CA

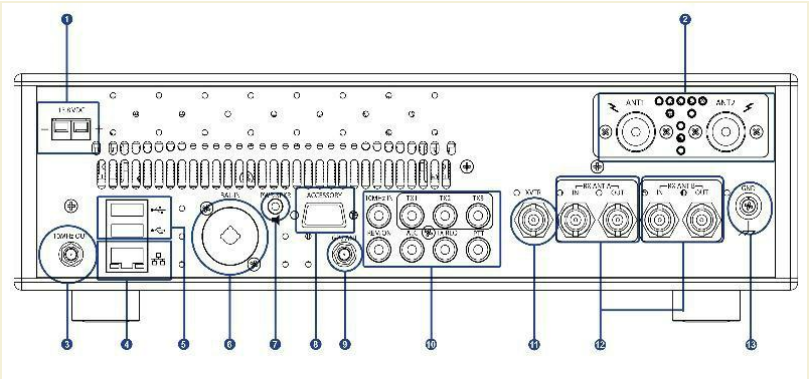

FLEX-6700 Rear Panel

1. +13.8V DC Power (IN)
DC power is applied to the radio via a 2 pin PowerPole™ connector. The DC power supply should be +13.8V +/- 15% capable of 25 Amps continuous output.

2. Antenna Connectors (IN/OUT) [FLEX-6500/FLEX-6700 ONLY]
The 2 SO-239 50 ohm antenna connectors can be used for both transmit and receive of the signal. On the FLEX-6500: Either ANT1 or ANT2 can be selected for the transceive port. ANT1 can also be selected for TX and ANT2 for receive or the reverse. (Note: T/R switching speed is decreased in this mode. On the FLEX-6700: Either ANT1 or ANT2 can be selected for the transceive port. SCU-A is paired with the transceive operation. The opposite port is connected to SCU-B. There is also a 3db splitter internal to the FLEX-6700 to allow either ANT1 or ANT2 to feed both SCU inputs.

3. Optional 10 MHz GPSDO (OUT)
This is a precision 50 ohm 10MHz reference output from a GPS Disciplined Oscillator GPSDO for use with transverters and other shack test equipment. When the GPS is locked, the output is accurate to 5x10^-12 over 24 hours.

4. 1 Gb Ethernet Connector (IN/OUT)
This RJ-45 Ethernet connection supports auto-speed negotiation for 10, 100, or 1000 Mbps. Auto-crossover is also supported for direct connection to a client PC.

5. USB 2.0 Peripheral Connectors (IN/OUT)
These USB 2.0 compliant Type A connections will support the FlexControl user interface as well as future peripheral interfaces.

6. Balanced Microphone/Line (IN) [FLEX-6500/FLEX-6700 ONLY]
This combination XLR / ¼" Tip-Ring-Sleeve Female connector provides a fully balanced 1V p-p @ 600 ohm input to the audio mixer on the FLEX-6500 and FLEX-6700.

7. Powered Speaker/Line (OUT)

This 1/8" Stereo Mini jack provides stereo line level 1V p-p @ 10K ohm output of received audio on Left and Right mixer channels. This connector is typically connected to powered PC speakers but also can be used as a line out to external audio gear.

8. Accessory Connector (IN/OUT)
This multifunction DB-15 HD Female connector is designed for system expansion of the FLEX-6000 Series. Additionally, line level audio input and outputs as well as keying signals are available.

PIN	ACC Signal	DIR	SPECIFICATION
1	LINE IN(+)	IN	Line level audio input to mixer - 1Vpp @ 600 ohms
2	LINE1 OUT(+)	OUT	Line level audio output from mixer - 1Vpp @ 10K ohms
3	LINE2 OUT(+)	OUT	Line Level audio output from mixer - 1Vpp @ 10K ohms
4	INT/FSK	IN	External interrupt / External FSK input (Open Drain pulled to +3.3V through 2.7Kohm)
5	GROUND	GND	GROUND
6	LINE IN(-)	GND	Audio Input signal return*
7	LINE1 OUT(-)	GND	Line 1 Output signal return
8	LINE2 OUT(-)	GND	Line 2 Output signal return
9	+5VDC	OUT	5VDC @ 0.5A max. thermally fused with reverse voltage protection
10	GROUND	GND	GROUND
11	TX OUT	OUT	LOW = transmit, HI = receive (Open drain output capable of 50 VDC @ 140mA max.)*
12	SDA	I/O	I2C serial data 5V TTL level (Reserved for future expansion)
13	TX REQ	IN	LOW = inhibit RF, HI = RF out (Pulled to +3.3V through 2.7K ohm*
14	PTT	IN	LOW = transmit, HI=receive (Pulled to +3.3V through 2.7K ohm *
15	SCL	I/O	I2C serial clock 5V TTL level (Reserved for Future Expansion)

* No connection on FLEX-6700R

9. Optional GPS Antenna (IN)
This is the 50 ohm SMA female antenna connection for the optional GPSDO 10MHz reference. This connection provides 3.3V power for the included amplified GPS patch antenna.

10. Amplifier/Control
External 10MHz Reference (IN)
This RCA female connector accepts a 3Vpp max. 10MHz reference input used to provide an external frequency reference to the FLEX-6000 in lieu of the internal oscillator or GPS if desired.

Remote ON (IN)
Ground this RCA female contact closure to energize the main power relay in the FLEX-6000.

ALC (IN) [FLEX-6500/FLEX-6700 ONLY]
The RCA female accepts a 0 to -4V Automatic Level Control (ALC) feedback input to limit the output of the FLEX-6500 and FLEX-6700 power output. NOTE: While the FLEX-6000 Series fully supports ALC feedback, most modern amplifier manufacturers discourage the use of ALC. The consensus is that properly controlling the maximum RF power output per band is a much more efficient and lower distortion method of controlling an external amplifier. All FLEX-Series radios support programmable output power per band. Please consult your manufacturer's operator manual for best practices.

TX REQ (IN) [FLEX-6500/FLEX-6700 ONLY]
The TX REQ RCA female input is used to delay the power output of the FLEX-6500 or FLEX-6700 transmitter. Ground = no RF output. Open = RF output active. This signal is internally pulled to +3.3V through a 2.7K ohm resistor.

PTT (IN) [FLEX-6500/FLEX-6700 ONLY]
The PTT RCA female input is used to key the FLEX-6500 and FLEX-6700. Ground = Transmit, Open = Receive. This signal is internally pulled to +3.3V through a 2.7K ohm resistor.

TX1, TX2, TX3 (OUT) [FLEX-6500/FLEX-6700 ONLY]
These 3 RCA female open drain outputs support up to 50 VDC @ 140mA max to key up to 3 different amplifiers or remote control circuits during transmit.

11. Transverter IF Connector (IN/OUT)
This multifunction BNC connector provides a common Intermediate Frequency (IF) interface for use with external transverters. For the FLEX-6500, this is a 0dBm nominal (+10dBm max.) output with a full dynamic range input. While normal transverter operation is done at 28MHz, this IF frequency actually covers the entire 30kHz-77MHz receive and 100kHz to 77MHz transmit frequency range. The FLEX-6700 also adds the capability for a 135-165MHz 0dBm nominal IF output with matching IF level input to support microwave transverters. In addition to transverter support, this connector can be used as an auxiliary antenna input.

12. SCU Receive Antenna Connectors (IN/OUT)
SCU A Receive Antenna Connectors (IN/OUT)
These 2 BNC connectors provide an Input and Output 50 ohm loop for Spectral Capture Unit (SCU) A. This IN/OUT loop can be activated via software control to insert external filters, pre-selectors, or a pre-amplifier between an active antenna and SCU A. Alternatively, SCU-A IN can directly connect a receive-only antenna to SCU-A.

SCU B Receive Antenna Connectors (IN/OUT)
[FLEX-6700/FLEX-6700R ONLY]
These 2 BNC connectors provide an Input and Output 50 ohm loop for Spectral Capture Unit (SCU) B. This IN/OUT loop can be activated via software control to insert external filters, pre-selectors, or a pre-amplifier between an active antenna and SCU B. Alternatively, SCU-B IN can directly connect a receive-only antenna to SCU-B.

13. Ground Terminal
This knurled screw is provided to connect the FLEX-6000 Series radio to your station ground. It's best to bond your FLEX-6000, power supply, and all other station equipment to a quality common point ground with a short connection. The use of braid or ground strap is recommended.

FLEX-6500 Rear Panel

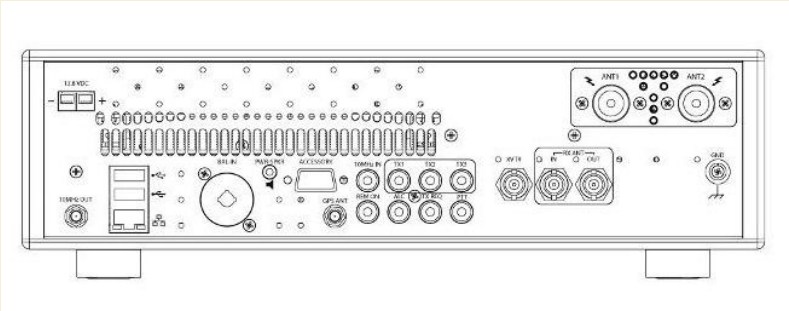

FLEX-6500 Rear Panel

Connectivity on the rear of the FLEX-6500 Signature Series transceiver is the same as described above for the FLEX-6700. The difference though is that the FLEX-6500 does not provide the SCU B Receive Antenna connectors as this unit is not equipped with an additional SCU. Other differences/similarities are called out in the above text.

FLEX-6700R Specific I/O

The FLEX-6700R is a receive only radio. This unit shares some similarities with the transceiver rear panel but incorporates several changes. Detailed descriptions of each connection are described below:

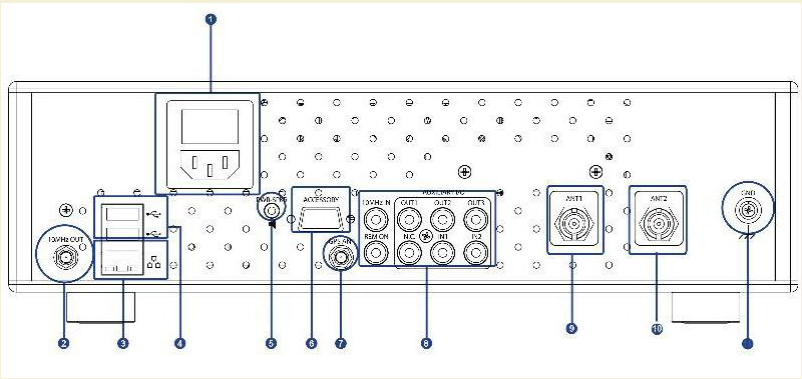

FLEX-6700R Rear Panel

1. AC INPUT (IN)
Self Contained power supply IEC C14 receptacle supporting multi-national voltages from 85 to 264VAC @ 47-63Hz.

2. Optional 10 MHz GPSDO (OUT)
This is a precision 50 ohm 10MHz reference output from a GPS Disciplined Oscillator GPSDO for use with transverters and other shack test equipment. When the GPS is locked, the output is accurate to 5x10^-12 over 24 hours.

3. 1 Gb Ethernet Connector (IN/OUT)
This RJ-45 Ethernet connection supports auto-speed negotiation for 10, 100, or 1000 Mbps. Auto-crossover is also supported for direct connection to a client PC.

4. USB 2.0 Peripheral Connectors (IN/OUT)
These USB 2.0 compliant Type A connections will support the FlexControl user interface as well as future peripheral interfaces.

5. Powered Speaker/Line (OUT)
This 1/8" Stereo Mini jack provides stereo line level 1V p-p @ 10K ohm output of received audio on Left and Right mixer channels. This connector is typically connected to powered PC speakers but also can be used as a line out to external audio gear.

6. Accessory Connector (IN/OUT)
This multifunction DB-15 HD Female connector is designed for system expansion of the FLEX-6000 Series. Additionally, line level audio input and outputs as well as keying signals are available. Refer to the pin-out table in the FLEX-6700 description section above.

7. Optional GPS Antenna (IN)
This is the 50 ohm SMA female antenna connection for the optional GPSDO 10MHz reference. This connection provides 3.3V power for the included amplified GPS patch antenna.

8.FLEX-6700R Specific I/O
External 10MHz Reference (IN)
This RCA female connector accepts a 3Vpp max. 10MHz reference input used to provide an external frequency reference to the FLEX-6000 in lieu of the internal oscillator or GPS if desired.

Remote ON (IN)
Ground this RCA female contact closure to energize the main power relay in the FLEX-6000.

OUT1,OUT2,OUT3 (OUT)
These 3 RCA female open drain outputs support up to 50 VDC @ 140mA to control up to 3 different remote control circuits or switching relays.

IN1,IN2 (IN)
These RCA female inputs are general purpose inputs used for

system level sensing. Ground = TRUE. Open = FALSE. This signal is internally pulled to +3.3V through a 2.7K ohm resistor.

9./10. ANT1, ANT2 (IN)
These 2 BNC connectors are the 50 ohm inputs for Spectral Capture Units SCU-A and SCU-B.

11. Ground Terminal
This knurled screw is provided to connect the FLEX-6000 Series radio to your station ground. It's best to bond your FLEX-6000, power supply, and all other station equipment to a quality common point ground with a short connection. The use of braid or ground strap is recommended.

FLEX-6000 Signal Chain Basics

- by Steve Hicks - N5AC, VP Engineering

The signal chain in the FLEX-6000 Signature Series radios is considerably different from a traditional radio signal chain. For many hams, understanding how their equipment achieves its performance numbers is part of the fun of owning a radio. To that end, we thought we would spend a little time telling you about how the "guts" of the FLEX-6000 function and what the real performance implications of some of these capabilities are.

For the FLEX-6000, it all begins in the Spectral Capture Unit (SCU). The SCU's job is to take the off-air signal from an antenna jack on the radio and convert it into the best digital signal possible. The input to each SCU, pictured in Figure 1, is one of the many antenna or receiver connectors on the radio. Coming out of the SCU is an incredible volume of digital data --- 3.93Gbps for each SCU. Just for comparison purposes, this data would fill forty of your typical 100Mbps Ethernet cables that many of you use in your house. If you are more on the leading edge, you may be using Gigabit Ethernet. If you are, it would take four 1Gbps Ethernet connections just for a single SCU. Inside the SCU are three main functions: filtering, level control and digitization.

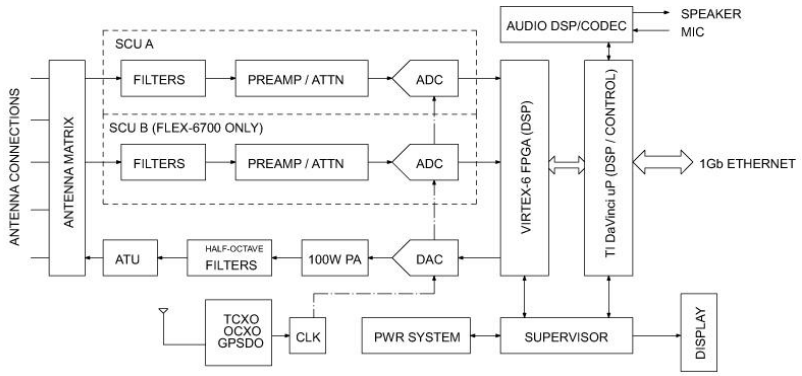

Fig. 1 - FLEX-6000 Signature Series Hardware Architecture

Under normal operation, the very high dynamic range of the FLEX-6000 Series allows you to virtually connect the antenna directly to the SCU for broadband reception. Occasionally though, an extremely strong adjacent signal could be present that could overload the SCU adversely affecting performance. How strong? It would take a signal much stronger than S9+60dB with the pre-amps enabled to create this overload. Examples would be living very close to a strong broadcast station or participating in a large multi-station contest operation. To achieve world class performance even under these harsh conditions, we've added a series of filters to the FLEX-6500 and FLEX-6700 SCUs to remove unwanted out-of-band signals. Each of these pass-band filters, sometimes referred to as preselectors, is targeted for a specific ham band so they remove signals that are not in that ham band. They are used strictly to keep signals from overloading subsequent parts of the SCU in the event that there is a strong out-of-band signal. For most operations you will want to leave the filters off. If desired the SmartSDR software can select the best combination of filters for the job you are trying to perform so you can focus on more interesting tasks.

After the filters come preamps and attenuators. These are here to adjust the signal level as appropriate for both the band conditions and the signal you want to hear. All three of the FLEX-6000 Signature Series radios have a variable gain preamplifier that can both amplify and attenuate signals. The FLEX-6700 and 6700R radios also have a second preamp that can lower the noise figure of the radio to approximately 7dB for 6m and 2m operation. Attenuation is provided for situations where a strong local signal needs to be reduced in amplitude to avoid overloading the receiver. The FLEX-6000 architecture can handle very large signals, up to +6dBm to +9dBm, corresponding to a S9+80dB range signal so use of the attenuator will be rare for most operators.

After any amplification/attenuation is the Analog to Digital Converter (ADC). The ADC's job is to convert the RF to digital data with little or no distortion. For most operation, the ADC is the most performance critical component in the system. Although not technically a mixer, any noise introduced into the ADC sampling clock or the RF signal itself will mix in the ADC just as if it were a mixer. For this reason, an ultra-low phase noise clock source is required for the ADC. In the case of all three radios, the clock has phase noise better than -130dBc/Hz at 1kHz offset and -147dBc/Hz at 10kHz offset. Ultra-low phase noise provides for the cleanest possible reception and transmitter performance alike.

From the ADC, data moves into the Field Programmable Gate Array (FPGA). The FPGA is the single most expensive component in the radio system and is responsible for slicing up the HF spectrum into receivers and display components like panadapters (spectrum display) and waterfalls. Handling the bandwidth of data out of the

ADCs simply cannot be done in the more traditional microprocessor or DSP processors available in most radios. Panadapters are essentially the output of a time domain to frequency domain conversion (Fast Fourier Transform) that is performed in the FPGA and then shipped to the client for display. The FLEX-6000 can have several Slice Receivers operating at the same time. When we talk about Slice Receivers, each of which is a full performance receiver, we are talking about a receiver that is created inside the FPGA by carving out a slice of that 3.9Gbps data and sending the receiver data to the DaVinci processor.

Further down the line, the DaVinci is responsible for all control of the hardware, communication with the graphical user interface (GUI) and the final pieces of the signal chain. Inside of the DaVinci, both final filtering and demodulation are performed. Since all of these are done in a general purpose processor with a DSP engine as a co-processor, adding new modulation schemes is relatively easy to do. Since the bulk of the signal chain is reprogrammable -- both the FPGA and the DaVinci -- the FLEX-6000 can be changed over time to use new modes and applications that are yet to be built.

The wide-band signal chain inside of the FLEX-6000 Signature Series radios provides not only performance beyond what is capable in a traditional narrow band receiver, it also adds the capability to use many ham bands at the same time. Flexible pre-selectors in the SCU along with amplification and attenuation allow operation in the harshest of RF situations.

FLEX-6700 Signature Series Jacket - Order Survey

For those FlexRadio enthusiasts that pre-ordered a Limited Edition version of the FLEX-6700 Signature Series transceiver, it is time to collect your information for production of your FLEX-6700 Signature Series jacket. Just click on the following link or cut and paste into your browser and take our quick survey. This will allow us to get your jacket into production so it is ready to ship with your radio. Thank you.

FLEX-6700 Jacket Order Survey

- FlexRadio Marketing

FlexRadio Systems
4616 W. Howard Lane, Ste. 1-150
Austin, TX 78728
512-535-4713(main), 512-233-5143 (fax)
www.flexradio.com / sales@flexradio.com